ITEM NO.	PART NUMBER	DESCRIPTION	MATERIAL	QTY.
1	FP-FLPL-3301	FLOOR PLATE, LEFT SIDE, HB3300	1/8" FLOOR PLATE, HR	1
2	FP-FLPL-HB CYLINDER HINGE PLATE 30 long	HB 3XX0 SHORT CYLINDER HINGE PLATE	1/8" HRS. PLATE	1
3	FP-FLPL-HB CYLINDER LID 30 series	HB 30th SERIES CYLINDER DOOR	1/8" HRS. PLATE	1
4	FP-FLPL-HB-LID	FLOOR PLATE LID HYDRA BED	1/8" FLOOR PLATE	1

REVISIONS			
REV.	DESCRIPTION	DATE	APPROVED
B	ADDED E/H HOSE KNOCK OUT	1/17/2014	
C	SHORTENED WIDTH BY 1/16"	2/11/2014	
D	REVISE HOLES	9/8/2016	
E	REVISE SLOT POSITION	12/19/2017	

NOTE:
1. EDGES MUST BE COMMON BETWEEN FLOOR & DOOR. TO INSURE PATTERN MATCH AT ASSEMBLY.
2. SHEET TO BE SQUARED BEFORE CUTTING DOORS & CORNERS.
3. FLOOR PLATE SIZE 48x120x1/8

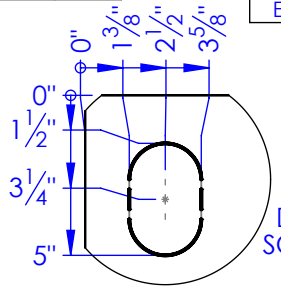

DETAIL B
SCALE 1 : 6

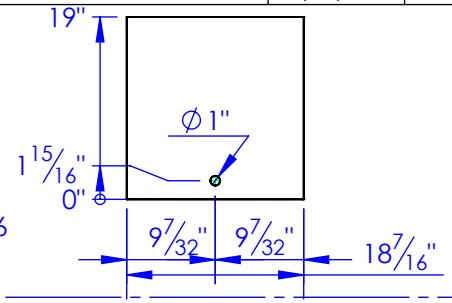

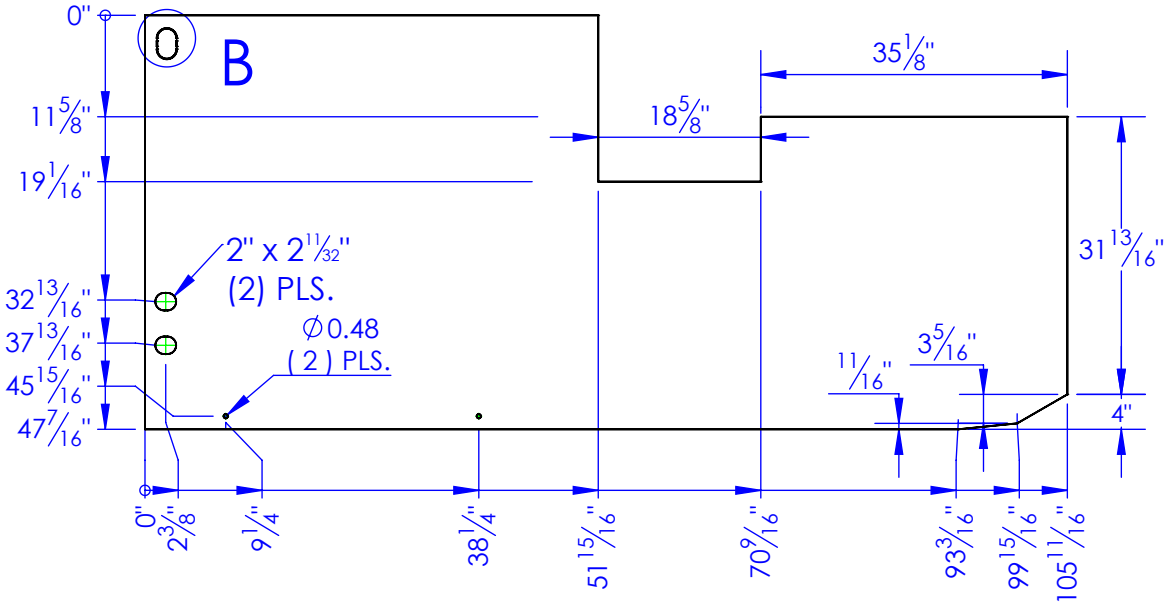

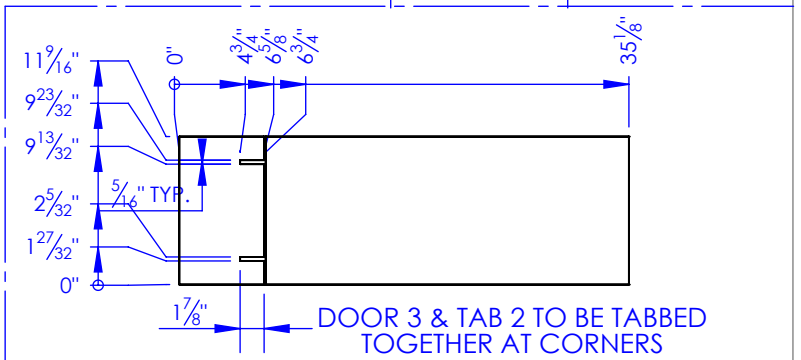

DOOR 3 & TAB 2 TO BE TABBED TOGETHER AT CORNERS

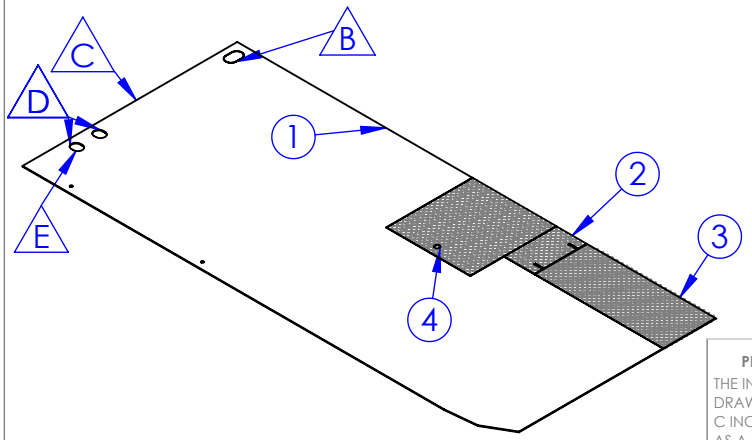

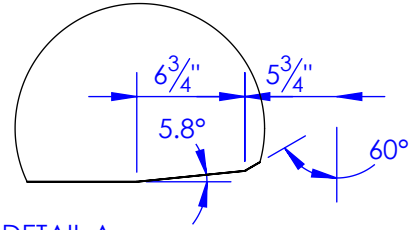

DETAIL A
SCALE 1 : 12

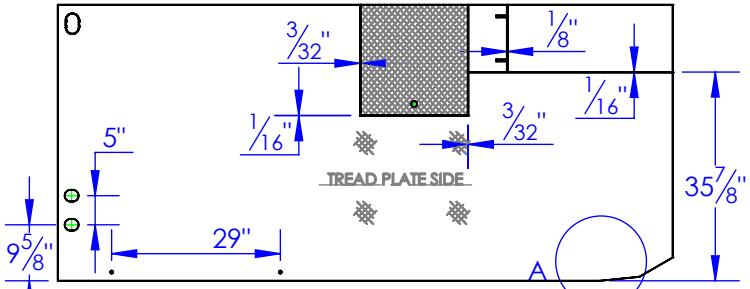

DOOR TO BE CUT OUT OF SHEET AND KEPT WITH SAME FLOOR TO INSURE PATTERN MATCH.

PROPRIETARY AND CONFIDENTIAL
THE INFORMATION CONTAINED IN THIS DRAWING IS THE SOLE PROPERTY OF TRIPLE C INC. ANY REPRODUCTION IN PART OR AS A WHOLE WITHOUT THE WRITTEN PERMISSION OF TRIPLE C INC. IS PROHIBITED.

DIMENSIONS ARE IN INCHES
TOLERANCES:
FRACTIONAL ±1/16
ANGULAR: MACH ±1 BEND ±
TWO PLACE DECIMAL ±010
THREE PLACE DECIMAL ±005

MATERIAL 1/8 FLOOR PLATE

DO NOT SCALE DRAWING

	NAME	DATE
DRAWN	ETHAN	12/19/2017
PART #	FP-FLPL-3301	
ASM #		

COMMENTS:

FLOOR PLATE, LEFT SIDE, HB3300

P.O. BOX 248,
SABETHA, KS 66534

TRIPLE C INC.

SIZE	DWG. NO.	REV.
A	11-2216 E	E

SCALE:1:20 WEIGHT: 203.40 SHEET 1 OF 1